Parts Diagram for AR160/AR180 Long Reach Pruner Series

Blades:	AR1601	Blade Set 160 Series
	AR1801	Blade Set 180 Series

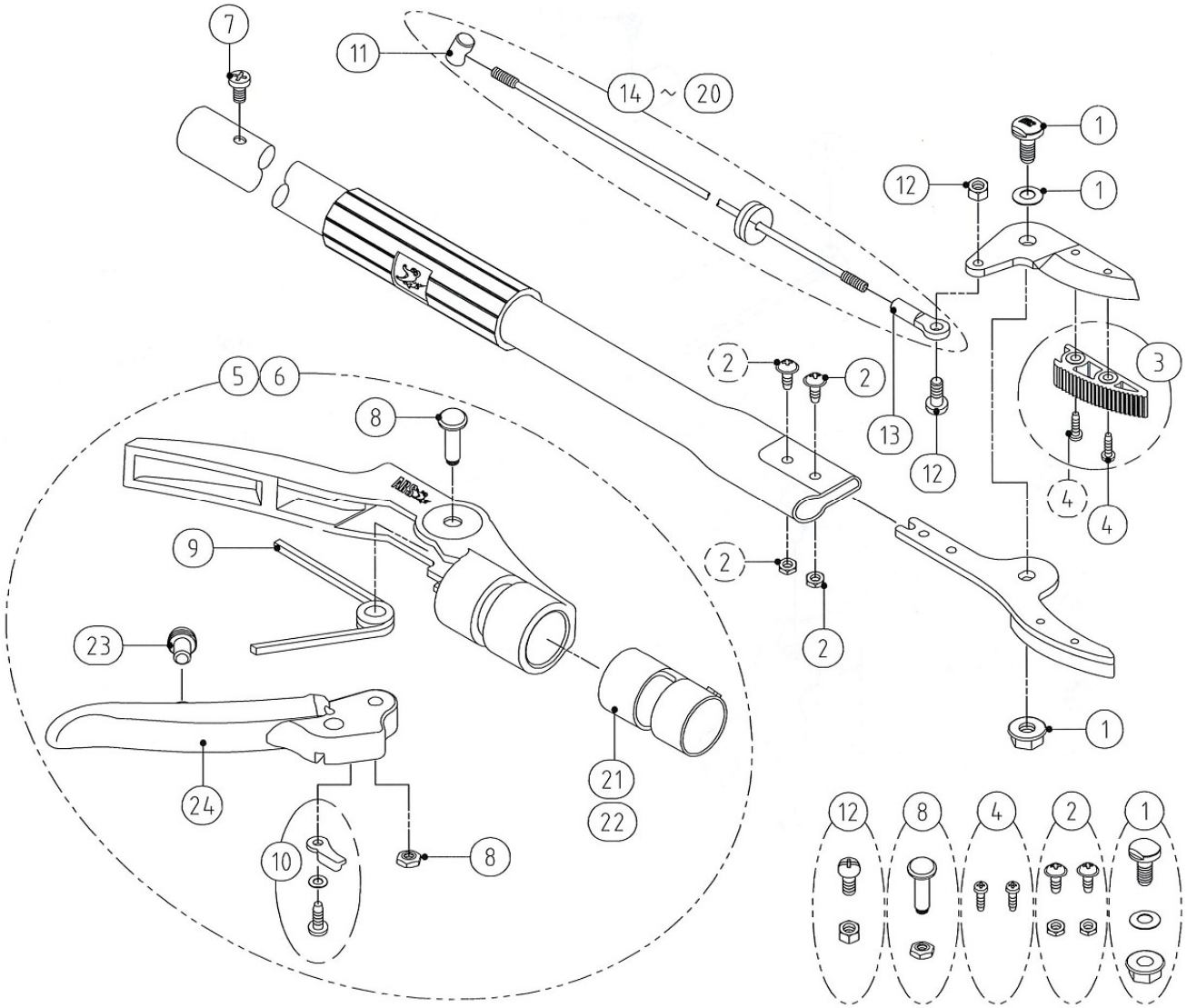

1.	ARSP30	Bolt/Nut/Washer 160/180	13.	ARSP45	Rod Cap for Long Arm Pruner
2.	ARSP31	Screw/Wash/Nut 160/180	14.	ARSP46	Repl. Rod for AR160180
3.	ARSP32	Holding device w/2 screws 160 series	15.	ARSP48	Repl. Rod for AR160240
			16.	ARSP81	Repl. Rod for 160.35
4.	ARSP33	Bolt For Holding Device 160 Series	17.	ARSP82	Repl. Rod for 160.6
5.	ARSP38A	Handle Set 160-0.6, 1.2 & 1.8	18.	ARSP83	Repl. Rod for 160/1801.2
6.	ARSP38B	Handle Set for 160-2.4	19.	ARSP84	Repl. Rod for 160/1802.1
7.	ARSP39	Screw Long Arm Pruner	20.		Rod set for 16015
8.	ARSP40	Screw Handle Long Arm	21.	ARSP169	Sleeve for Grip of 160-0.6, 1.2, 1.8
9.	ARSP41	Spring Long Arm Pruners	22.	ARSP168	Sleeve For The Grip Of 160-2.4
10.	ARSP42	Latch Lock Long Arm	23.	ARSP80	Buffer for 160 & 180 Series
11.	ARSP43	Rod Fix Part Long Arm	24.	ARSP145	Grip Lever Long Arm Pruner
12.	ARSP44	Rod Fix Bolt Long Arm			

*Parts in grey not stocked